REV.	E.C.O.	DESCRIPTION	BY/DATE	APVD.

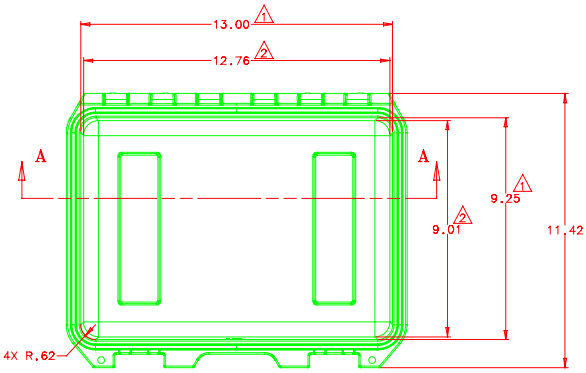

TOP VIEW
SHOWN WITH LID REMOVED

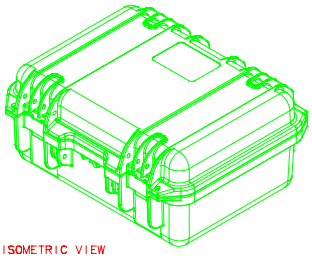

ISOMETRIC VIEW

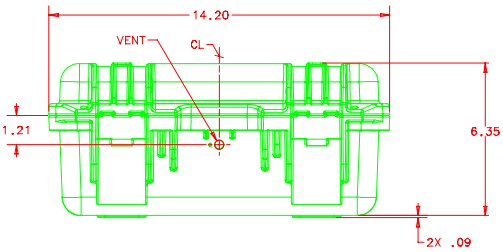

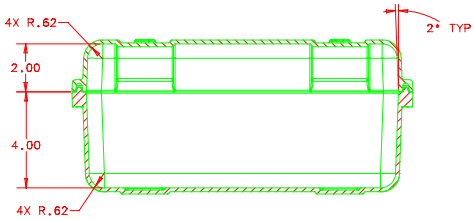

SECTION A–A

NOTES:

1. INTERIOR DIMENSION TAKEN AT PARTING LINE
2. INTERIOR DIMENSION TAKEN NEAR BOTTOM OF BASE, AT TOP OF .62 RADIUS
3. THIS DRAWING INTENDED TO BE USED FOR SIZING FOAM CUSHIONING, COMPLETE CASE ASSEMBLY NOT SHOWN. SHELLS NOT SOLD SEPARATELY.
4. THIS DRAWING AND ALL COPIES AND THE DESIGN AND DATA SHOWN ARE THE PROPERTY OF HARDIGG INDUSTRIES, INC. SO. DEERFIELD, MA U.S.A. AND INCLUDE PROPIETARY INFORMATION.

NEXT ASSY.
TOLERANCE UNLESS OTHERWISE SPECIFIED .XX ±.03 .XXX ±.01 ANGLE ±1°
DR. APONTE DATE 7-20-00 ENGR. DATE
CHKD. DATE APVD. DATE

This drawing and all copies and the design and data shown are the property of HARDIGG INDUSTRIES, INC. Therefore, it is to be used only for the purpose for which it is intended by HARDIGG INDUSTRIES, INC. Any other use, reproduction or disclosure of the contents shall not be permitted without the written consent of HARDIGG INDUSTRIES, INC. It will not be the drawing or any copy of the design or data shown (or reproduced, copied, disclosed, or utilized in any other way) to any other person, firm, corporation or other entity without the consent of HARDIGG INDUSTRIES, INC. Upon request or upon completion of the drawing, all copies and all material shall be returned.

TM HARDIGG INDUSTRIES, INC.
SOUTH DEERFIELD, MASSACHUSETTS 01373

TITLE DIMENSION ASSY, IM2100 (SHELL)

SIZE	CAGE	DWG. NO.	REV.
D	11214	P111-109	–

SCALE 1/2 DESIGN NO. P111