REV.	E.C.O.	DESCRIPTION	BY/DATE	APVD.

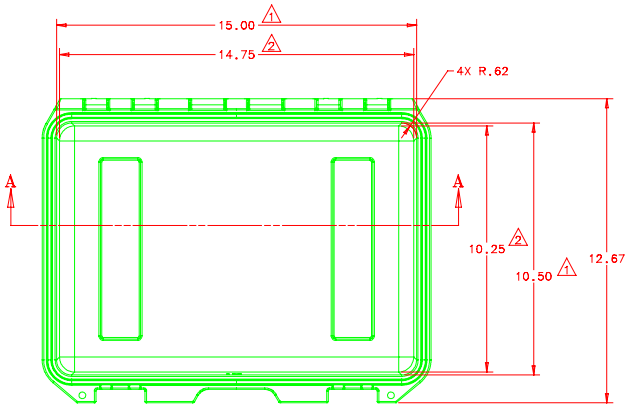

TOP VIEW
SHOWN WITH LID REMOVED

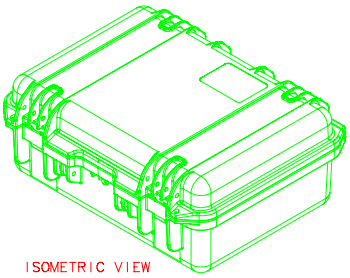

ISOMETRIC VIEW

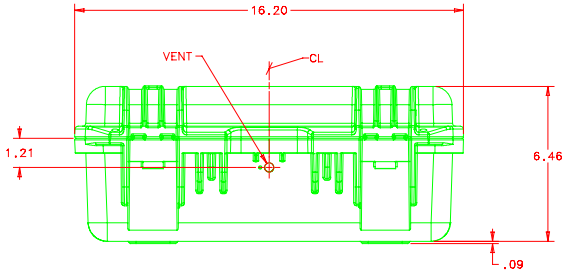

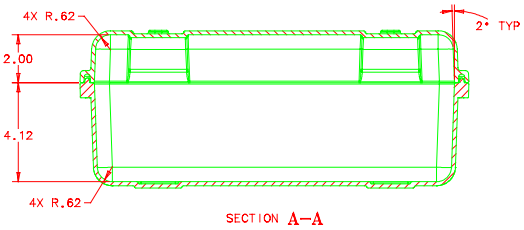

SECTION A–A

NOTES:

1. INTERIOR DIMENSION TAKEN AT PARTING LINE
2. INTERIOR DIMENSION TAKEN NEAR BOTTOM OF BASE, AT TOP OF .62 RADIUS
3. THIS DRAWING INTENDED TO BE USED FOR SIZING FOAM CUSHIONING, COMPLETE CASE ASSEMBLY NOT SHOWN. SHELLS NOT SOLD SEPARATELY.
4. THIS DRAWING AND ALL COPIES AND THE DESIGN AND DATA SHOWN ARE THE PROPERTY OF HARDIGG INDUSTRIES, INC. SO. DEERFIELD, MA U.S.A. AND INCLUDE PROPIETARY INFORMATION.

NEXT ASSY.
TOLERANCE UNLESS OTHERWISE SPECIFIED .XX ±.03 .XXX ± ANGLE
DR. APONTE DATE 7-20-00 ENGR. DATE
CHKD. DATE APVD. DATE

This drawing and all copies and the design and data shown are the property of HARDIGG INDUSTRIES, INC. Therefore, it is the intent that reproduction, copying, or disclosure to any people of properties of the material shown thereon, except as expressly authorized in writing by HARDIGG INDUSTRIES, INC. It will not be the drawing or any copy of the design or data shown or any reproduction, copy, disclosure or other use made of the drawing or any copy of the design or data shown, or any part of the drawing, or design and information shown thereon.

TM HARDIGG INDUSTRIES, INC.
SOUTH DEERFIELD, MASSACHUSETTS 01373

TITLE DIMENSION ASSY IM2200 (SHELL)

SIZE	CAGE	DWG. NO.	REV.
D	11214	P111-108	–

SCALE 1/2 DESIGN NO. P111