REV.	E.C.O.	DESCRIPTION	BY/DATE	APVD.

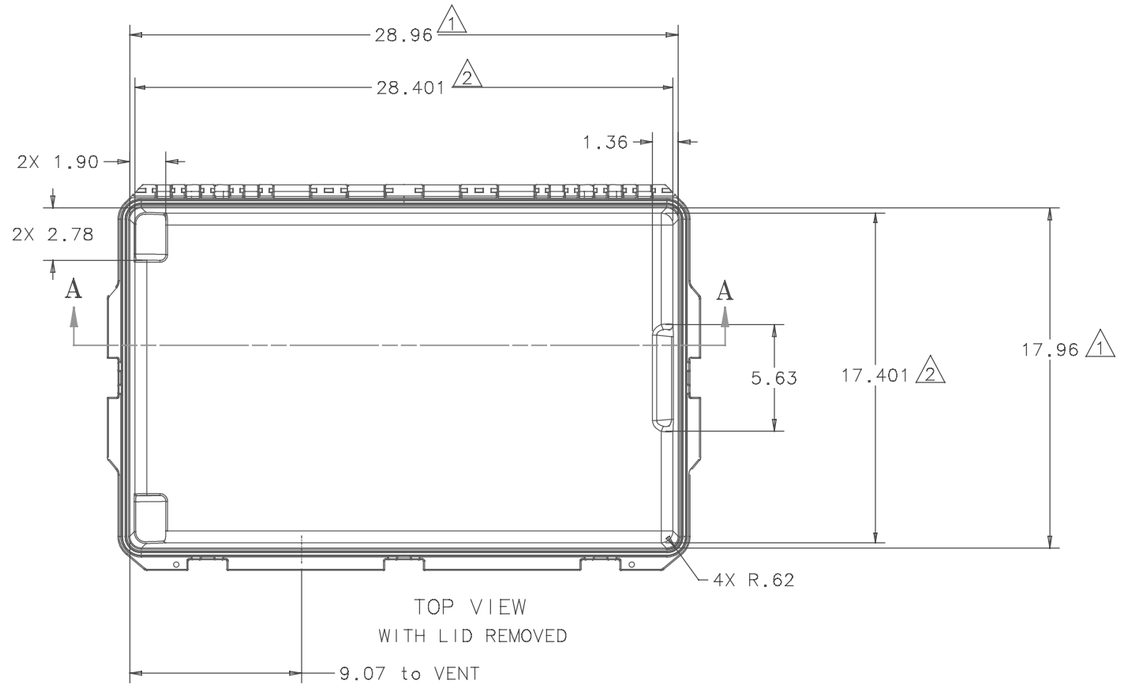

TOP VIEW
WITH LID REMOVED

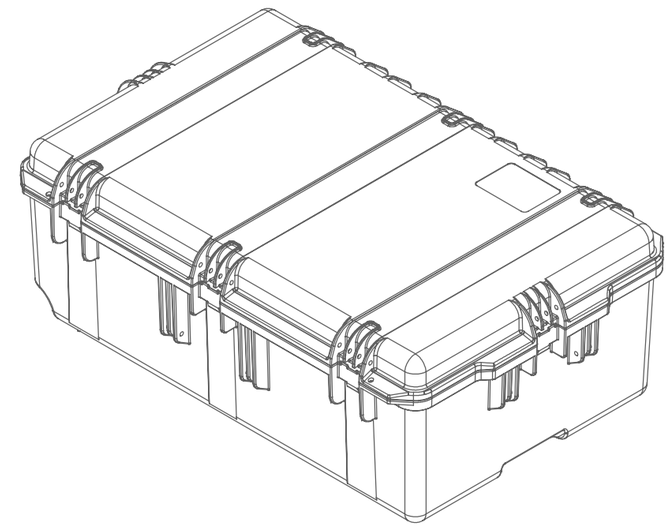

ISOMETRIC VIEW

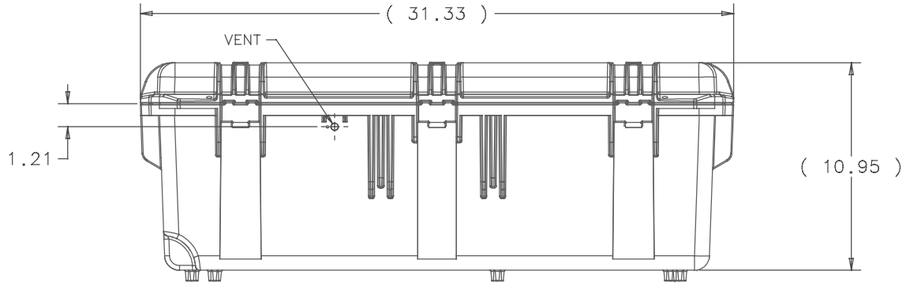

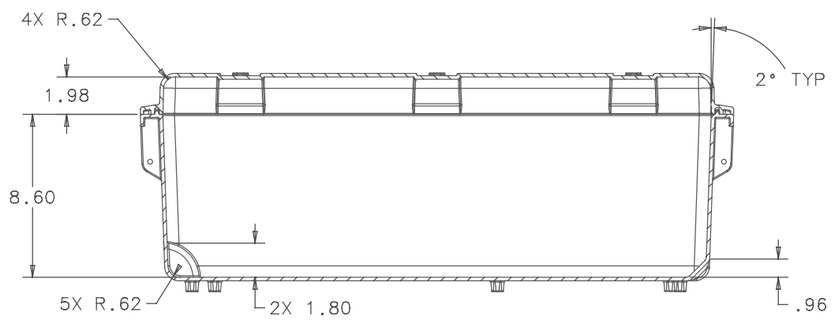

SECTION A–A

NOTES:

1. INTERIOR DIMENSION TAKEN AT PARTING LINE
2. INTERIOR DIMENSION TAKEN NEAR BOTTOM OF BASE, AT TOP OF .62 RADIUS
3. THIS DRAWING IS INTENDED TO BE USED FOR SIZING FOAM CUSHIONING. COMPLETE CASE ASSEMBLY NOT SHOWN. SHELLS NOT SOLD SEPARATELY.
4. THIS DRAWING AND ALL COPIES AND THE DESIGN AND DATA SHOWN ARE THE PROPERTY OF HARDIGG INDUTRIES, INC. SO. DEERFIELD, MA U.S.A. AND INCLUDE PROPRIETARY INFORMATION.

NEXT ASSY.			
TOLERANCE UNLESS OTHERWISE SPECIFIED	.XX ±.09	.XXX ±	ANGLE
DR. APONTE	DATE 3/13/02	ENGR.	DATE
CHKD.	DATE	APVD.	DATE

This drawing and all copies and the design and data shown are the property of HARDIGG INDUSTRIES, INC. So. Deerfield, MA U.S.A. and include proprietary information. The borrower by receipt or retention of the drawing agrees that, except as expressly authorized in writing by HARDIGG INDUSTRIES, INC. it will (1) not use the drawing or any copy of the design or data shown (2) not reproduce, copy, excerpt, exhibit or distribute the drawing or any copy for use by others and (3) upon demand return the drawing, all copies and all material copied therefrom.

HARDIGG™ INDUSTRIES, INC.
SOUTH DEERFIELD. MASSACHUSETTS 01373

TITLE
DIMENSION ASSY
iM2950 (SHELL)

SIZE	CAGE	DWG. NO.	REV.
D	11214	P111-100	00

SCALE 1/4 DESIGN NO. P111